JOHANNUS

SCHEMATIC DIAGRAMS

O P U S 1 4 1 0

ALSO USABLE FOR OPUS 1420

ALTERATIONS RESERVED

JOHANNUS Orgelbouw b.v.

Morsestraat 28 - 6716 AH Ede - Tel. (08380) 37403 - Fax (08380) 22238

CONTENTS

1. BLOCK DIAGRAM ORGAN
2. BLOCK DIAGRAM RACK
3. POSITION DIAGRAM CARDS (TOPVIEW) & EXTERNAL CONNECTIONS (mounted on the rearside of the organ)
4. PINNING BUS CARD CONNECTORS
5. TRANSFORMER CONNECTIONS & POWER SUPPLY
6. SCANNING KEYING & TRANSPOSER
7. STOP-BANK & SWITCH-BANK CAPTURE SYSTEM
8. INPUT CIRCUIT SCANNING KEYING, TRANSPOSER & GENERAL CRESCENDO CIRCUIT (master processor)
9. INPUT CIRCUIT STOPS & CAPTURE SYSTEM (master processor)
10. C.P.U. (master processor)
11. PROCESSOR CARD (2x)
12. GENERATOR CARD (2x)
13. VOICE CARD (10x)
14. VOLUMECONTROLS; HEADPHONES CONNECTIONS & ECHO INTERFACE (ota card pedal/great)
15. VOLUMECONTROLS; HEADPHONES CONNECTIONS & ECHO INTERFACE (ota card choir/swell)
16. EXPRESSION PEDAL CIRCUIT (2x) (ota card)
17. AMPLIFIER CARD (4x)
18. POSITION DIAGRAM ADJUSTMENTS INTERNAL POTENTIOMETERS

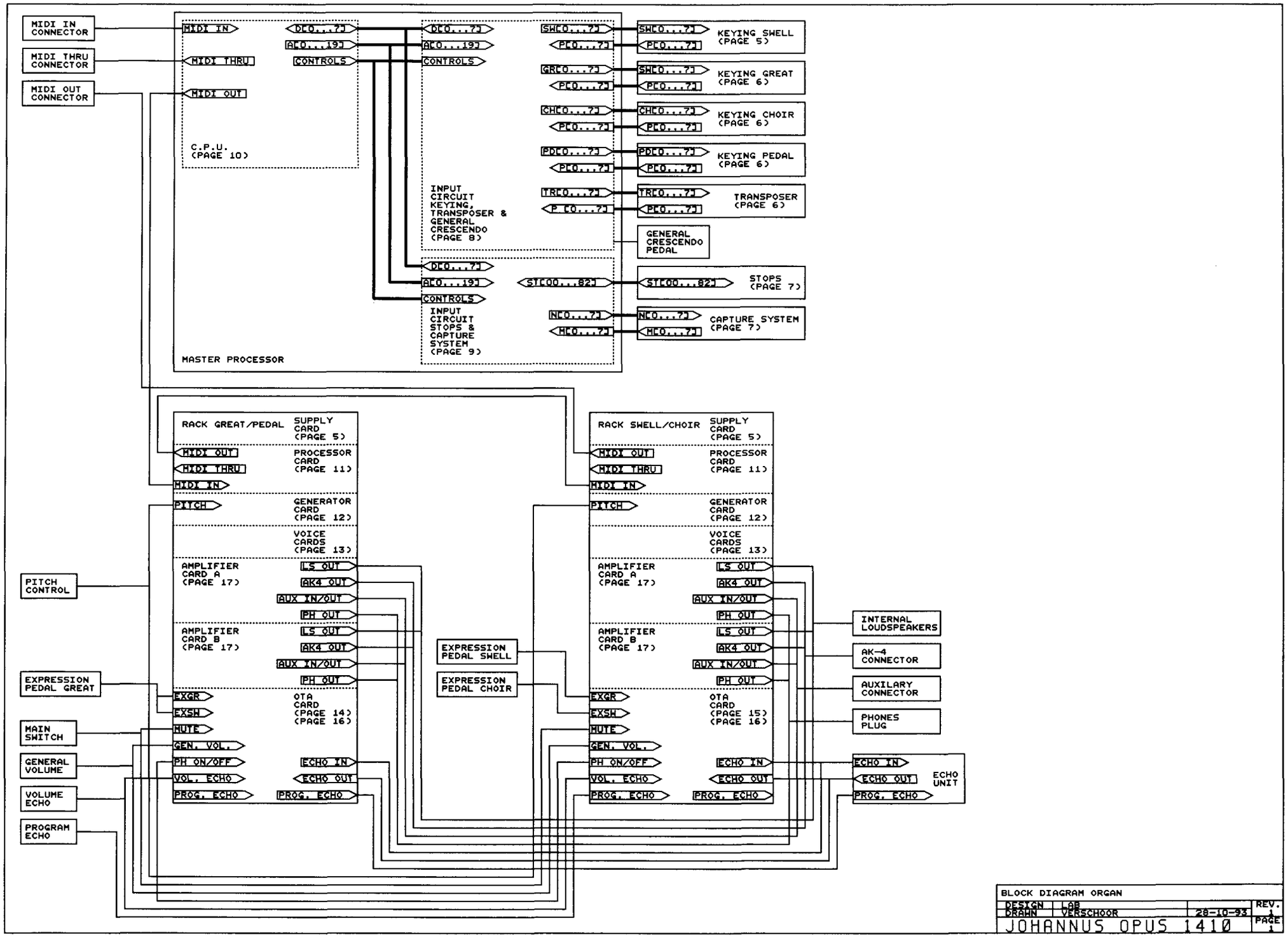

BLOCK DIAGRAM ORGAN

DESIGN	LAB		REV. 1
DRAWN	VERSCHOOR	28-10-93	PAGE 1

JOHANNUS OPUS 1410

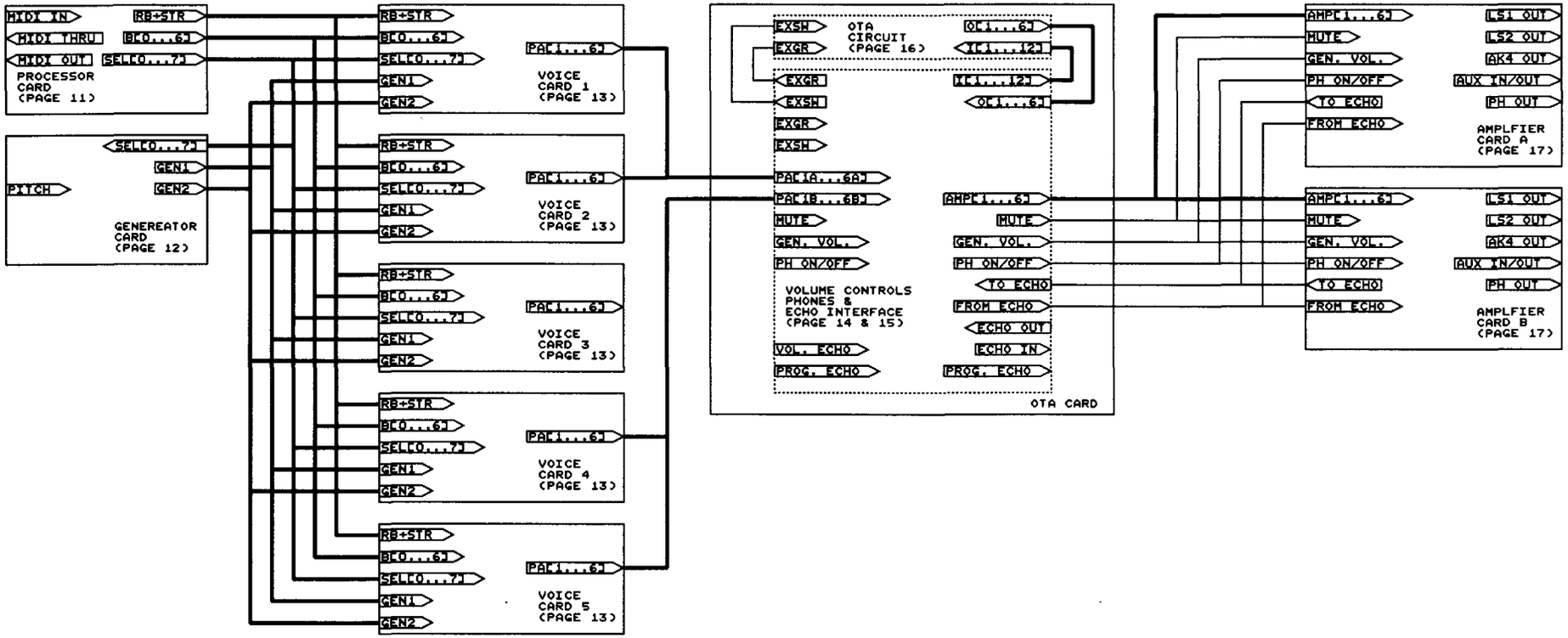

BLOCK DIAGRAM RACK			
DESIGN	LAB		REV.
DRAWN	VERSCHOOR	20-01-93	
JOHANNUS OPUS 1410			PAGE 2

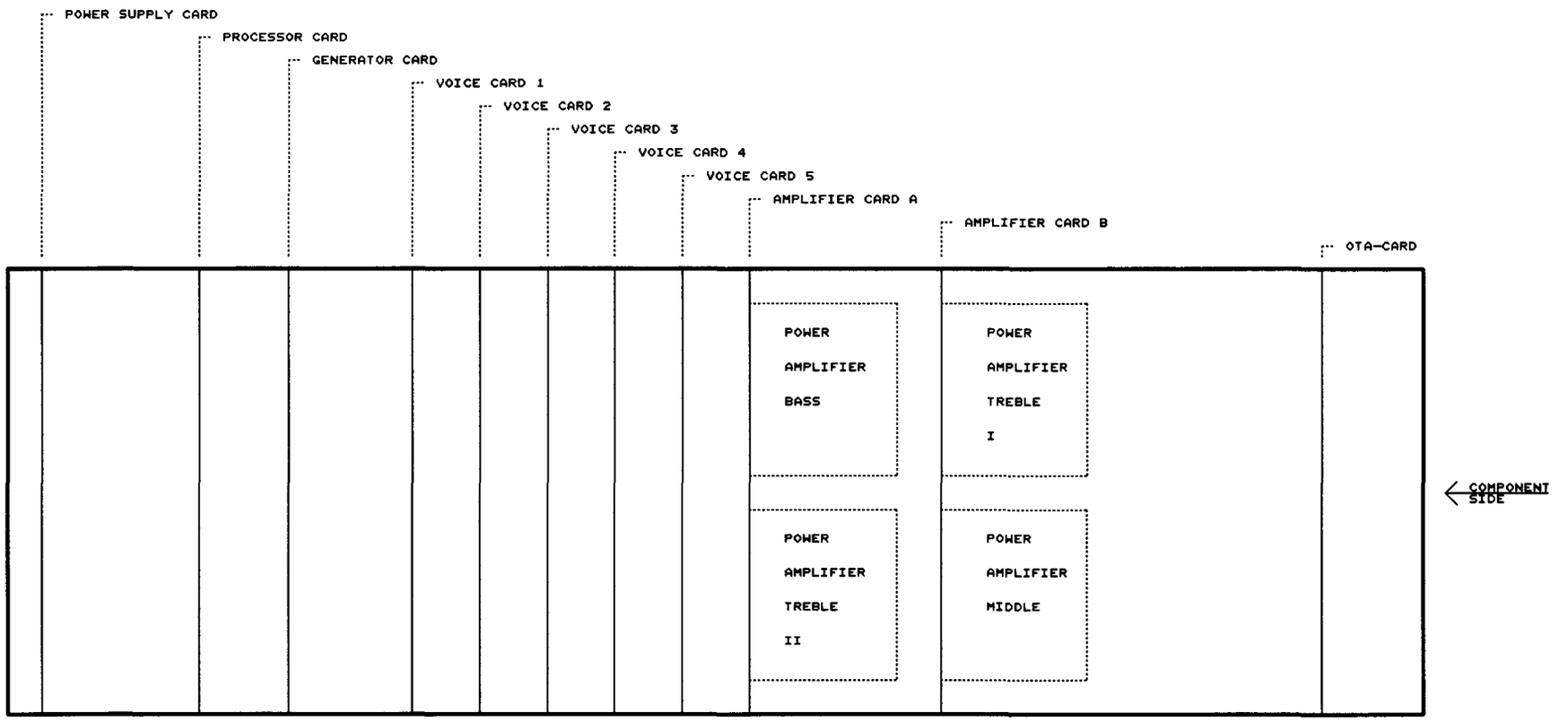

1. NOT CONNECTED
2. NOT CONNECTED
3. NOT CONNECTED
4. +5V MIDI IN
5. MIDI IN

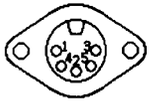

MIDI IN

1. NOT CONNECTED
2. NOT CONNECTED
3. NOT CONNECTED
4. +5V MIDI THRU
5. MIDI THRU

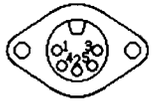

MIDI THRU

1. NOT CONNECTED
2. NOT CONNECTED
3. NOT CONNECTED
4. +5V MIDI OUT
5. MIDI OUT

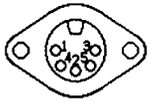

MIDI OUT

SOLDERINGSIDE VIEW

1. AK-4 OUT CHANNEL A
2. GROUND
3. NOT CONNECTED
4. AK-4 OUT CHANNEL B
5. NOT CONNECTED

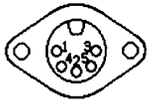

AK-4 OUT

1. AUX OUT CHANNEL A
2. GROUND
3. AUX IN CHANNEL A
4. AUX OUT CHANNEL B
5. AUX IN CHANNEL B

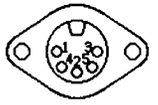

AUX IN/OUT

1. - BASS GREAT/PEDAL AMPLIFIER
2. + BASS GREAT/PEDAL AMPLIFIER
3. - MIDDLE GREAT/PEDAL AMPLIFIER
4. + MIDDLE GREAT/PEDAL AMPLIFIER
5. - TREBLE I PEDAL/GREAT AMPLIFIER
6. + TREBLE I PEDAL/GREAT AMPLIFIER
7. - TREBLE II GREAT/PEDAL AMPLIFIER
8. + TREBLE II GREAT/PEDAL AMPLIFIER

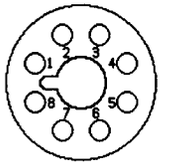

LS OUT A

1. - BASS SWELL/CHOIR AMPLIFIER
2. + BASS SWELL/CHOIR AMPLIFIER
3. - MIDDLE SWELL/CHOIR AMPLIFIER
4. + MIDDLE SWELL/CHOIR AMPLIFIER
5. - TREBLE I SWELL/CHOIR AMPLIFIER
6. + TREBLE I SWELL/CHOIR AMPLIFIER
7. - TREBLE II SWELL/CHOIR AMPLIFIER
8. + TREBLE II SWELL/CHOIR AMPLIFIER

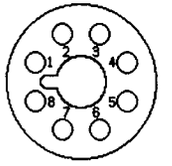

LS OUT B

(OPTIONAL)

POSITION DIAGRAM CARDS (TOPVIEW) & EXTERNAL CONNECTIONS (mounted on the rearside of the organ)

DESIGN	LAB		REV.
DRAWN	VERSCHOOR	20-01-93	
JOHANNUS OPUS 1410			PAGE 3

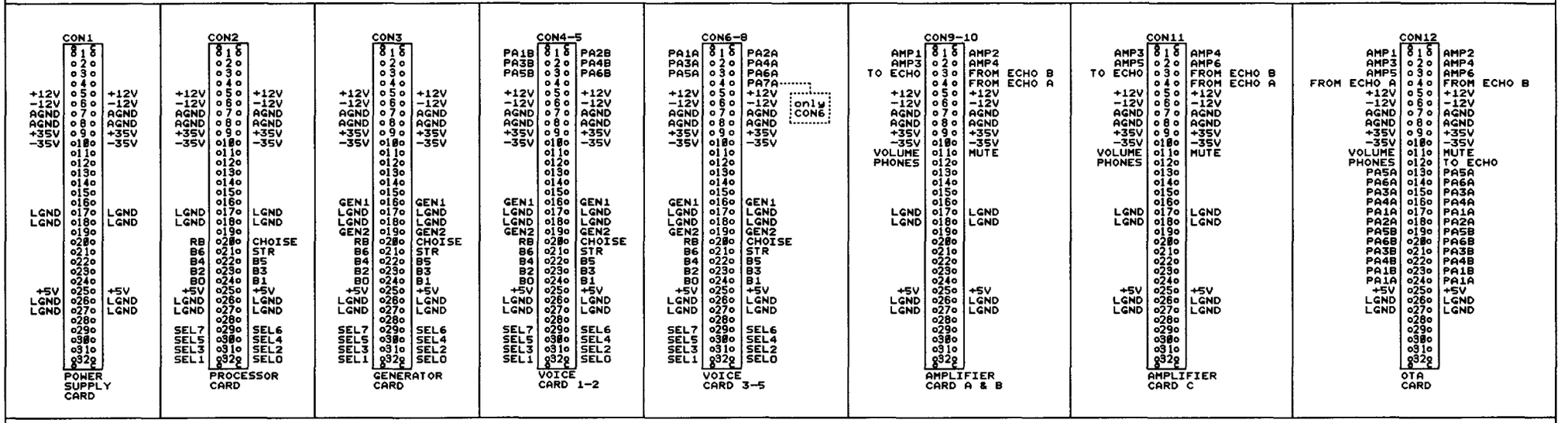

PINNING BUS CARD CONNECTORS

DESIGN	LOB		REV.
DRAWN	VERSCHOOR	20-01-93	
JOHANNUS OPUS 1410			PAGE 4

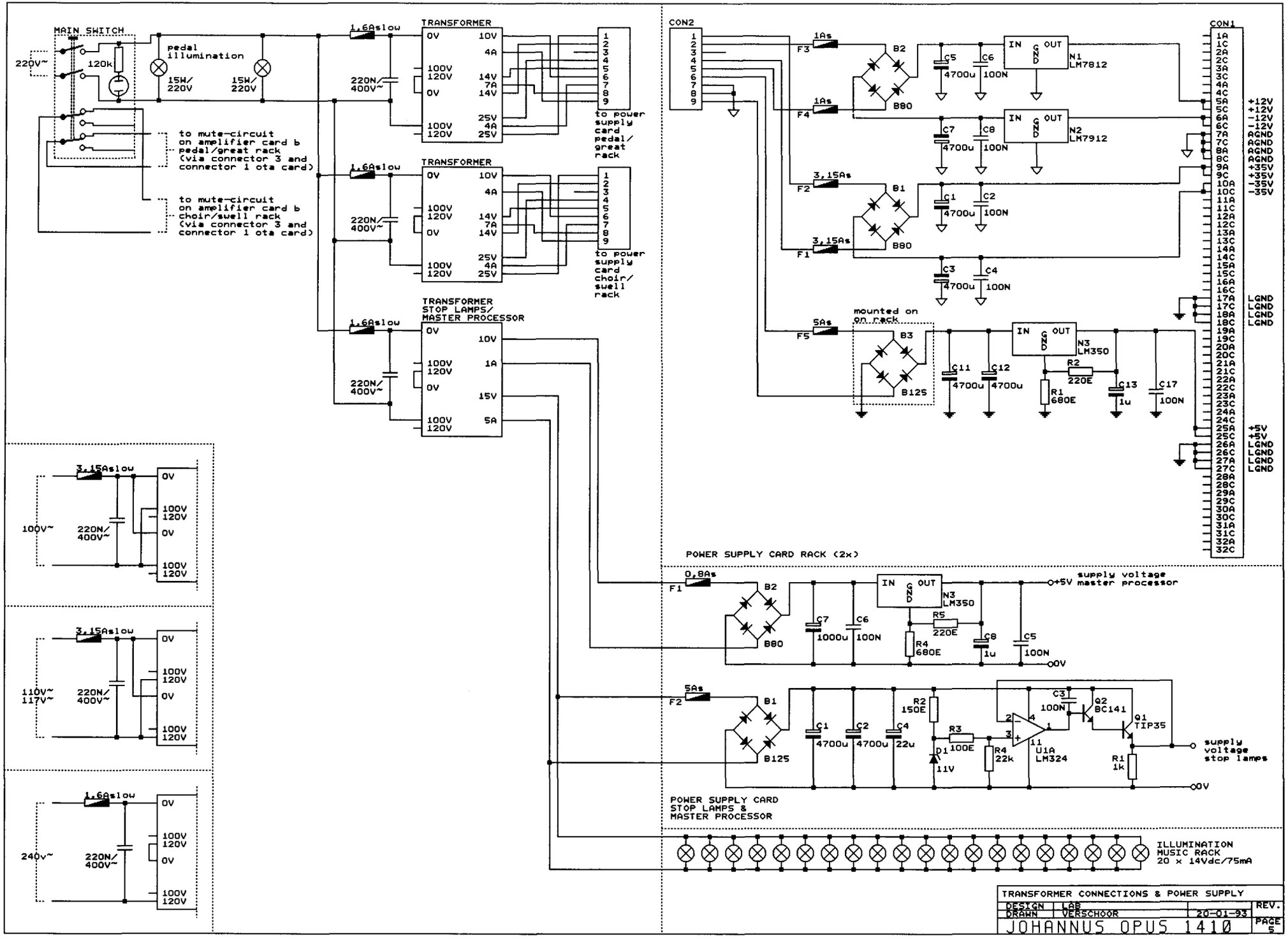
MAIN SWITCH
220V~
120k
pedal illumination
15W/ 220V
15W/ 220V
to mute-circuit on amplifier card b pedal/great rack (via connector 3 and connector 1 ota card)
to mute-circuit on amplifier card b choir/swell rack (via connector 3 and connector 1 ota card)
1,6Aslow
220N/ 400V~
TRANSFORMER
0V
10V
4A
100V 120V
14V 7A 14V
25V 4A 25V
to power supply card pedal/ great rack
to power supply card choir/ swell rack
TRANSFORMER STOP LAMPS/ MASTER PROCESSOR
1A
15V
5A
3,15Aslow
100V~
110V~ 117V~
240V~
CON2
CON1
F3 1As
F4 1As
F2 3,15As
F1 3,15As
F5 5As
B2
B80
B1
B125
B3
C5 4700u
C6 100N
C7 4700u
C8 100N
C1 4700u
C2 100N
C3 4700u
C4 100N
C11 4700u
C12 4700u
C13 1u
C17 100N
N1 LM7812
N2 LM7912
N3 LM350
IN OUT GND
R1 680E
R2 220E
mounted on on rack
+12V
-12V
AGND
+35V
-35V
LGND
+5V
POWER SUPPLY CARD RACK (2x)
F1 0,8As
R4 680E
R5 220E
supply voltage master processor
+5V
0V
F2 5As
R2 150E
R3 100E
R4 22k
D1 11V
C1 4700u
C2 4700u
C4 22u
C3 100N
Q2 BC141
Q1 TIP35
U1A LM324
R1 1k
supply voltage stop lamps
POWER SUPPLY CARD STOP LAMPS & MASTER PROCESSOR
ILLUMINATION MUSIC RACK 20 x 14Vdc/75mA
TRANSFORMER CONNECTIONS & POWER SUPPLY
DESIGN LAB
DRAWN VERSCHOOR 20-01-93
REV.
JOHANNUS OPUS 1410
PAGE 5

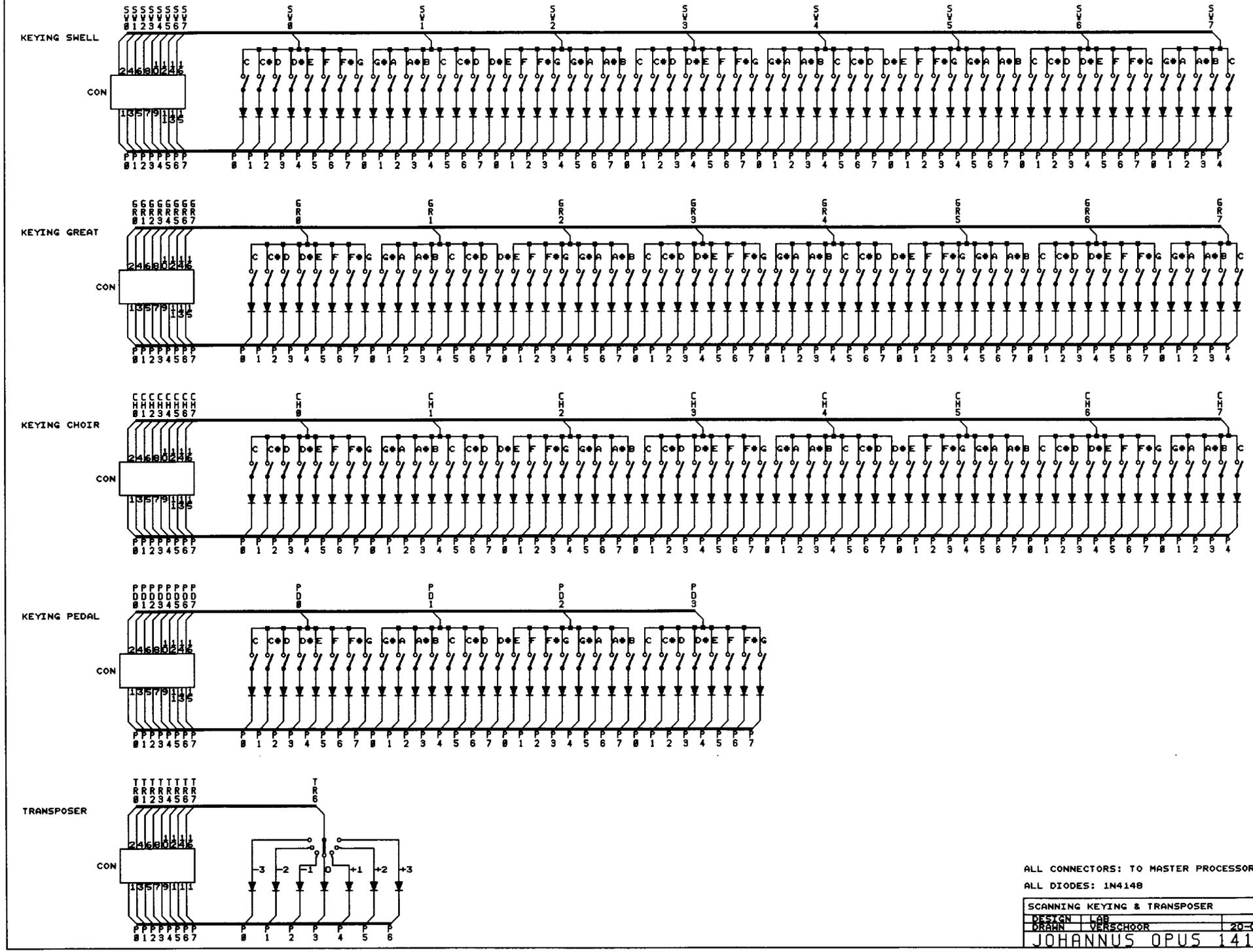

ALL CONNECTORS: TO MASTER PROCESSOR

ALL DIODES: 1N4148

SCANNING KEYING & TRANSPOSER			
DESIGN	LAB		REV.
DRAWN	VERSCHOOR	20-01-93	
JOHANNUS OPUS 1410			PAGE 6

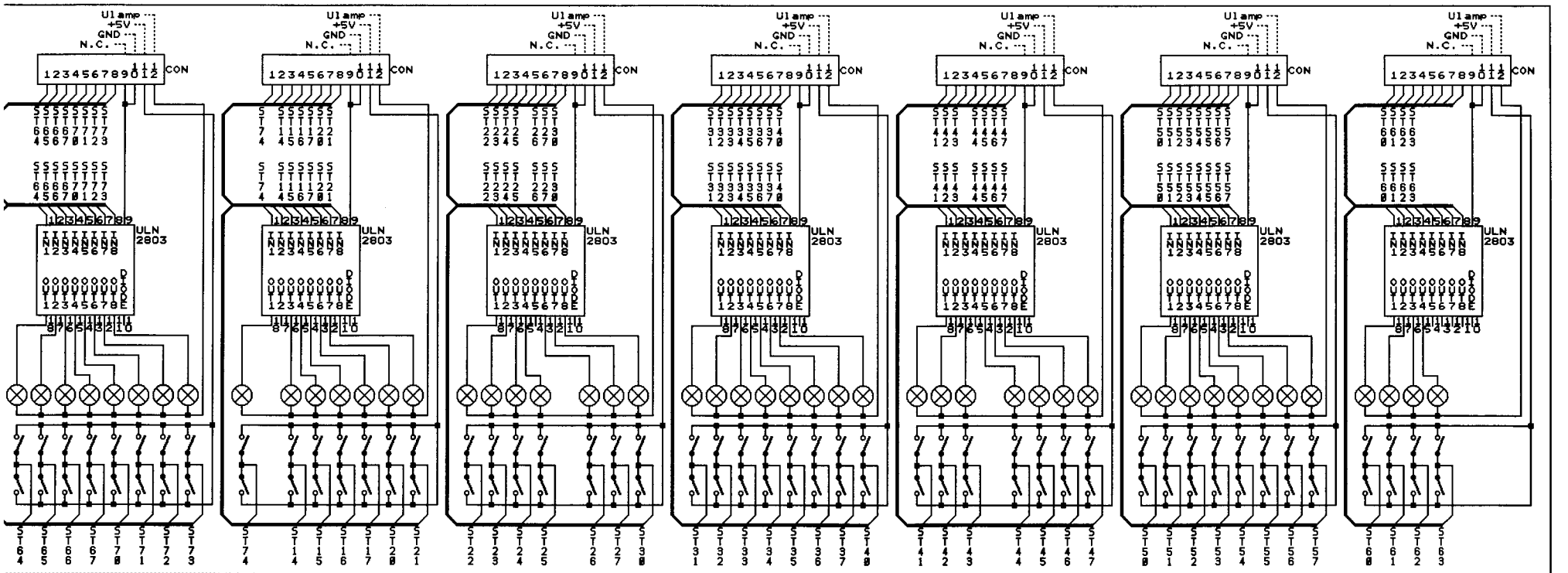

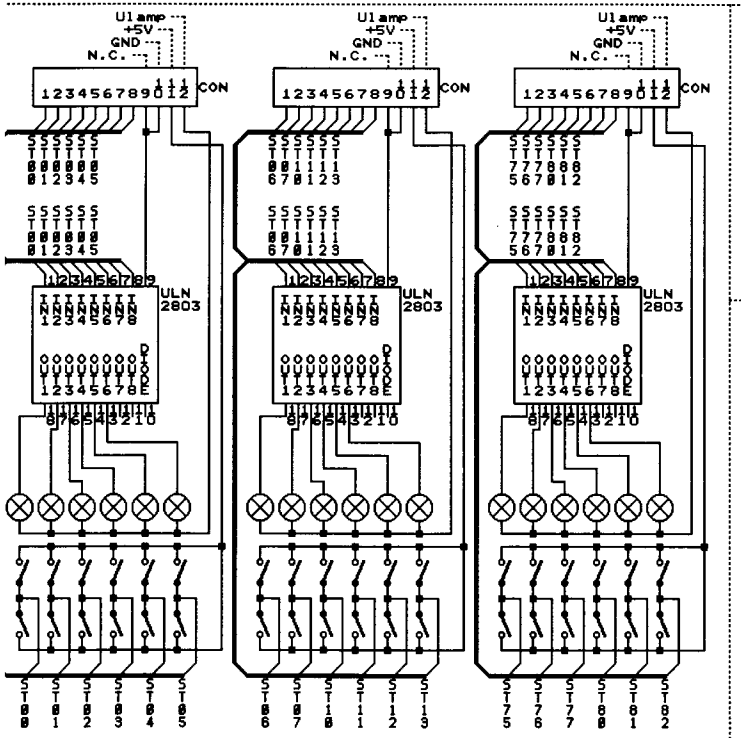

SWITCH-BANK CAPTURE SYSTEM

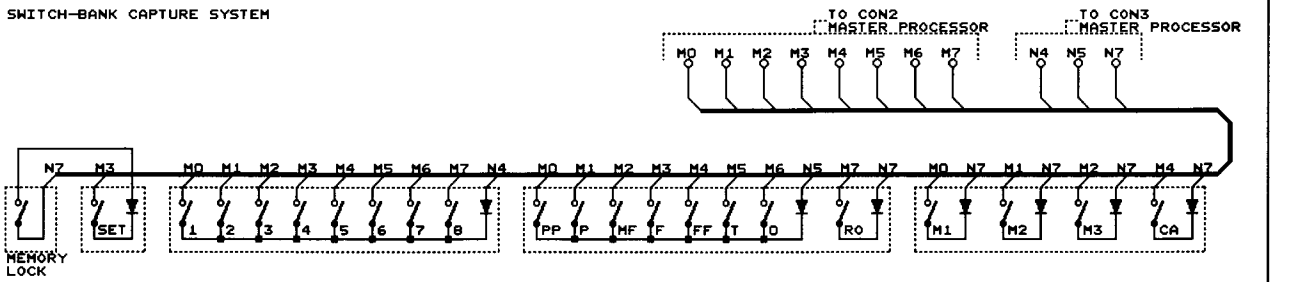

STOPLIST

PEDAL

ST00 = DOUBLE BASS 16'
ST01 = SUBBASS 16'
ST02 = OCTAVE 8'
ST03 = GEDACKT 8'
ST04 = CHORALBASS 4'
ST05 = BASSFLUTE 4'
ST06 = OPEN FLUTE 2'
ST07 = MIXTURE III
ST10 = BOMBARDE 32'
ST11 = CONTRA TRUMPET 16'
ST12 = TRUMPET 8'
ST13 = CLARION 4'

CHOIR

ST14 = LIEBL. GEDECKT 16'
ST15 = BOURDON 8'
ST16 = OCTAVE 4'
ST17 = OPEN FLUTE 4'
ST20 = NAZARD 2 2/3'
ST21 = CONICAL FLUTE 2'
ST22 = TIERCE 1 3/5'
ST23 = SIFFLUTE 1'
ST24 = CYMBAL II-III
ST25 = CLARINET 8'

GREAT

ST26 = BOURDON 16'
ST27 = OPEN DIAPASON 8'
ST30 = GAMBA 8'
ST31 = ROHRFLUTE 8'
ST32 = OCTAVE 4'
ST33 = OPEN FLUTE 4'
ST34 = TWELFTH 2 2/3'
ST35 = SUPEROCTAVE 2'
ST36 = CONICAL FLUTE 2'
ST37 = CORNET IV
ST40 = MIXTURE V-VII
ST41 = SCHARF III-V
ST42 = CONTRA TRUMPET 16'
ST43 = TRUMPET 8'

SWELL

ST44 = QUINTATON 16'
ST45 = OPEN DIAPASON 8'
ST46 = VIOLA 8'
ST47 = CELESTE 8'
ST50 = STOPPED FLUTE 8'
ST51 = OCTAVE 4'
ST52 = ROHRFLUTE 4'
ST53 = FLUTE TWELFTH 2 2/3'
ST54 = WALDFLUTE 2'
ST55 = NAZARD 1 1/3'
ST56 = OCTAVE 1'
ST57 = SESQUIALTER II
ST60 = RAUSCHEPFEIFE III-V
ST61 = FAGOTTO 16'
ST62 = CROMORNE 8'
ST63 = VOX HUMANA 8'

ACCESSORIES

ST64 = CHOIR TO GREAT
ST65 = SWELL TO GREAT
ST66 = SWELL TO CHOIR
ST67 = CHOIR TO PEDAL
ST70 = GREAT TO PEDAL
ST71 = SWELL TO PEDAL
ST72 = TREMULANT CHOIR
ST73 = TREMULANT GREAT
ST74 = TREMULANT SWELL
ST75 = CHORUS
ST76 = MANUAL BASS
ST77 = MIDI TO CHOIR (CHAN. 1)
ST80 = MIDI TO GREAT (CHAN. 2)
ST81 = MIDI TO SWELL (CHAN. 3)
ST82 = MIDI TO PEDAL (CHAN. 4)

ALL CONNECTORS: TO MASTER PROCESSOR

ALL STOPLAMPS: 14Vdc/75mA

STOPLIST

STOP-BANK & SWITCH-BANK CAPTURE SYSTEM

DESIGN	LAB		REV. 1
DRAWN	VERSCHOOR	28-10-93	
JOHANNUS OPUS 1410			PAGE 7

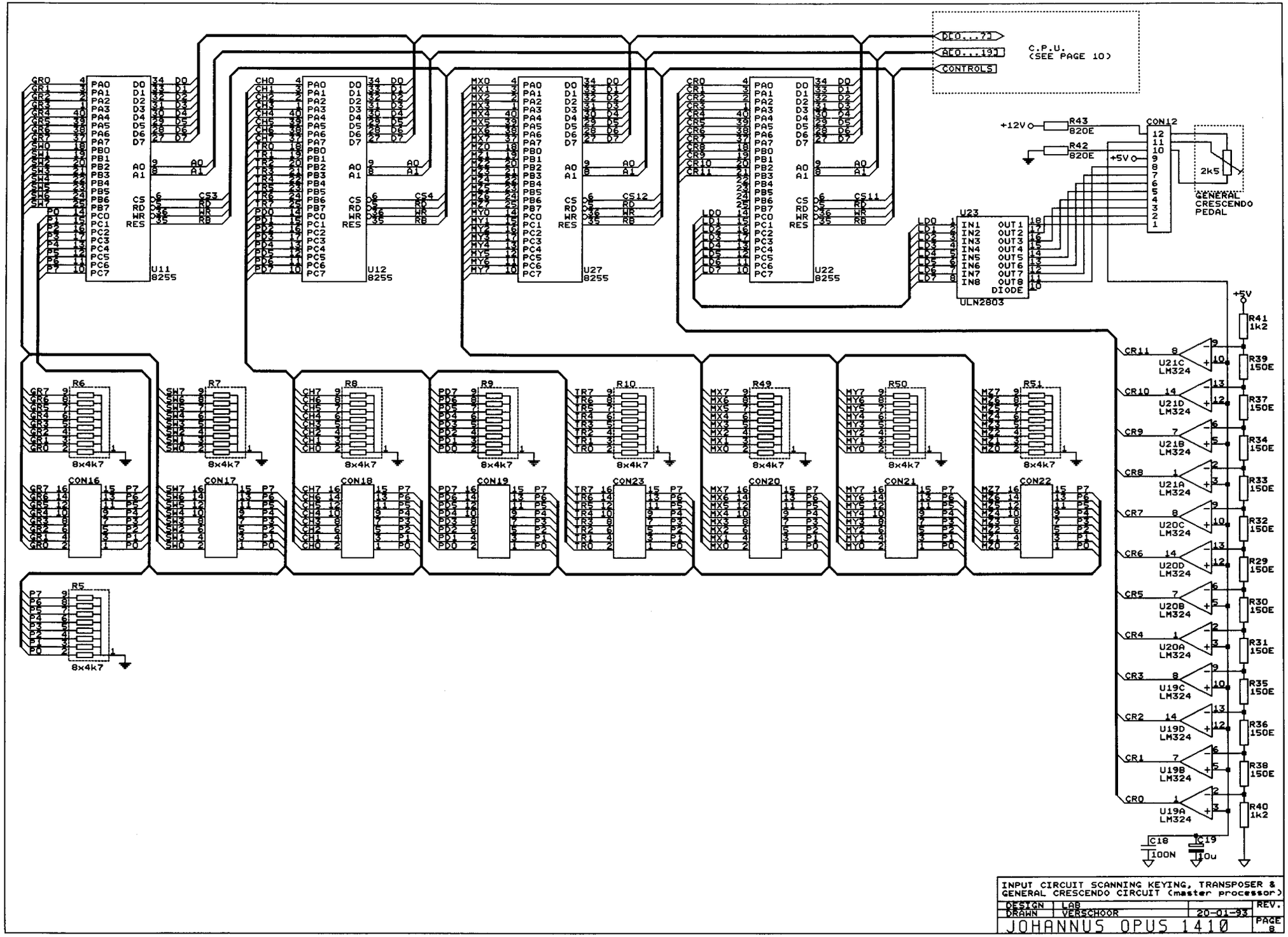

INPUT CIRCUIT SCANNING KEYING, TRANSPOSER & GENERAL CRESCENDO CIRCUIT (master processor)

DESIGN	LAB		REV.
DRAWN	VERSCHOOR	20-01-93	
JOHANNUS OPUS 1410			PAGE 8

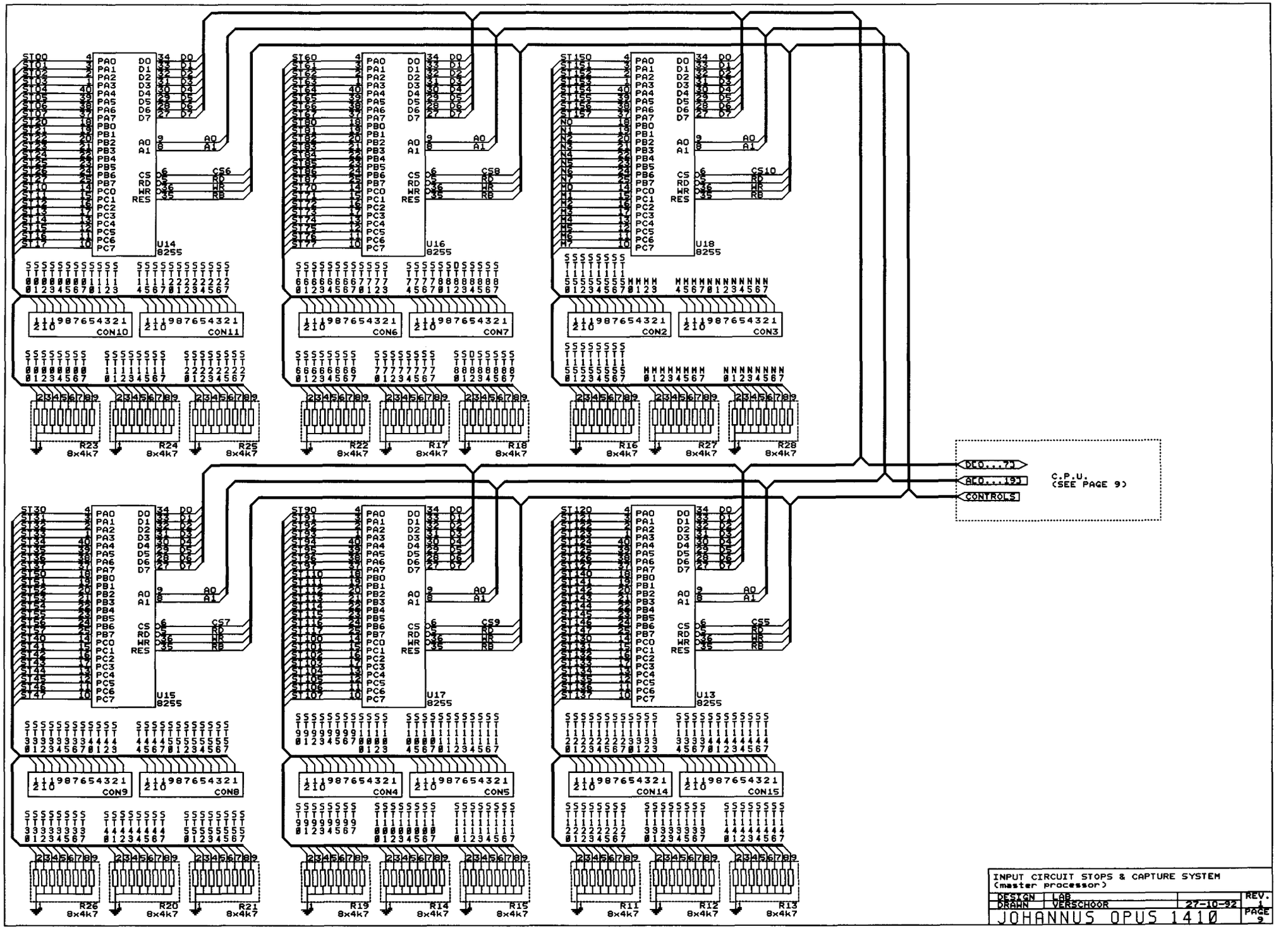
U14 8255
U16 8255
U18 8255
U15 8255
U17 8255
U13 8255
CON10
CON11
CON6
CON7
CON2
CON3
CON9
CON8
CON4
CON5
CON14
CON15
R23 8x4k7
R24 8x4k7
R25 8x4k7
R22 8x4k7
R17 8x4k7
R18 8x4k7
R16 8x4k7
R27 8x4k7
R28 8x4k7
R26 8x4k7
R20 8x4k7
R21 8x4k7
R19 8x4k7
R14 8x4k7
R15 8x4k7
R11 8x4k7
R12 8x4k7
R13 8x4k7
DI0...7
AI0...19
CONTROLS
C.P.U.
(SEE PAGE 9)
INPUT CIRCUIT STOPS & CAPTURE SYSTEM
(master processor)
DESIGN LAB
DRAWN VERSCHOOR
27-10-92
REV. 1
PAGE 9
JOHANNUS OPUS 1410

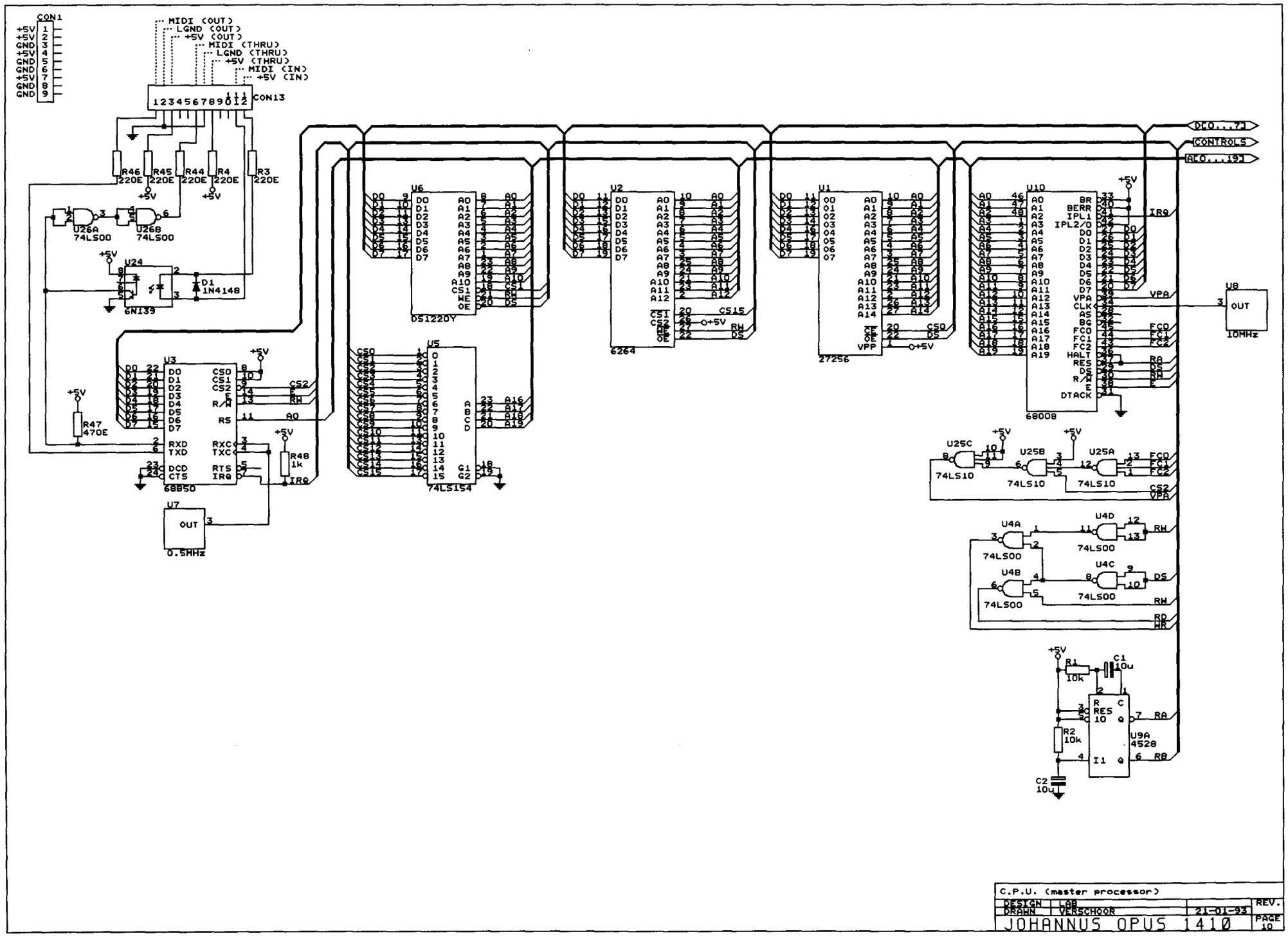
CON1
MIDI (OUT)
LGND (OUT)
+5V (OUT)
MIDI (THRU)
LGND (THRU)
+5V (THRU)
MIDI (IN)
+5V (IN)
CON13
R46 220E
R45 220E
R44 220E
R4 220E
R3 220E
U26A 74LS00
U26B 74LS00
U24 6N139
D1 1N4148
U6 DS1220Y
U2 6264
U1 27256
U10 68008
U3 68B50
U5 74LS154
U7 0.5MHz
U8 10MHz
R47 470E
R48 1k
U25C 74LS10
U25B 74LS10
U25A 74LS10
U4A 74LS00
U4B 74LS00
U4D 74LS00
U4C 74LS00
R1 10k
C1 10u
R2 10k
C2 10u
U9A 4528
DC0...7]
CONTROLS
AC0...19]
C.P.U. (master processor)
DESIGN LAB
DRAWN VERSCHOOR
21-01-93
REV.
JOHANNUS OPUS 1410
PAGE 10

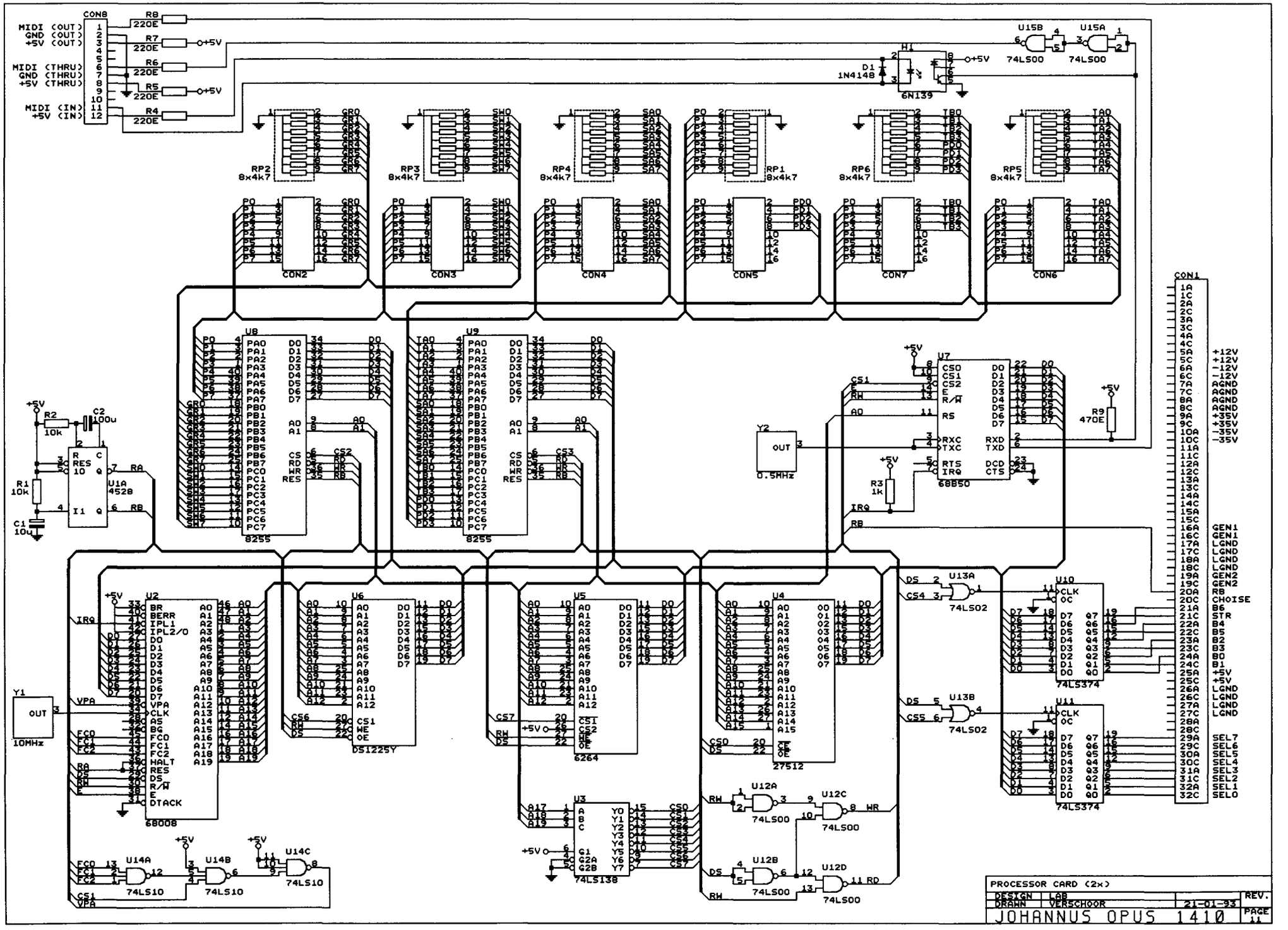
CON8
MIDI (OUT)
GND (OUT)
+5V (OUT)
MIDI (THRU)
GND (THRU)
+5V (THRU)
MIDI (IN)
+5V (IN)
R8 220E
R7 220E
R6 220E
R5 220E
R4 220E
+5V
U15B
U15A
74LS00
H1
6N139
D1 1N4148
RP2 8x4k7
RP3 8x4k7
RP4 8x4k7
RP1 8x4k7
RP6 8x4k7
RP5 8x4k7
CON2
CON3
CON4
CON5
CON7
CON6
U8
U9
8255
U7
68B50
Y2
0.5MHz
R9 470E
R3 1k
R2 10k
C2 100u
R1 10k
C1 10u
U1A 4528
U2
68008
U6
DS1225Y
U5
6264
U4
27512
U3
74LS138
U13A
U13B
74LS02
U10
U11
74LS374
U12A
U12B
U12C
U12D
74LS00
U14A
U14B
U14C
74LS10
Y1
10MHz
CON1
+12V
-12V
AGND
+35V
-35V
GEN1
LGND
GEN2
RB
CHOISE
B6
STR
B4
B5
B2
B3
B0
B1
SEL7
SEL6
SEL5
SEL4
SEL3
SEL2
SEL1
SEL0
PROCESSOR CARD (2x)
DESIGN LAB
DRAWN VERSCHOOR
21-01-93
REV.
JOHANNUS OPUS 1410
PAGE 11

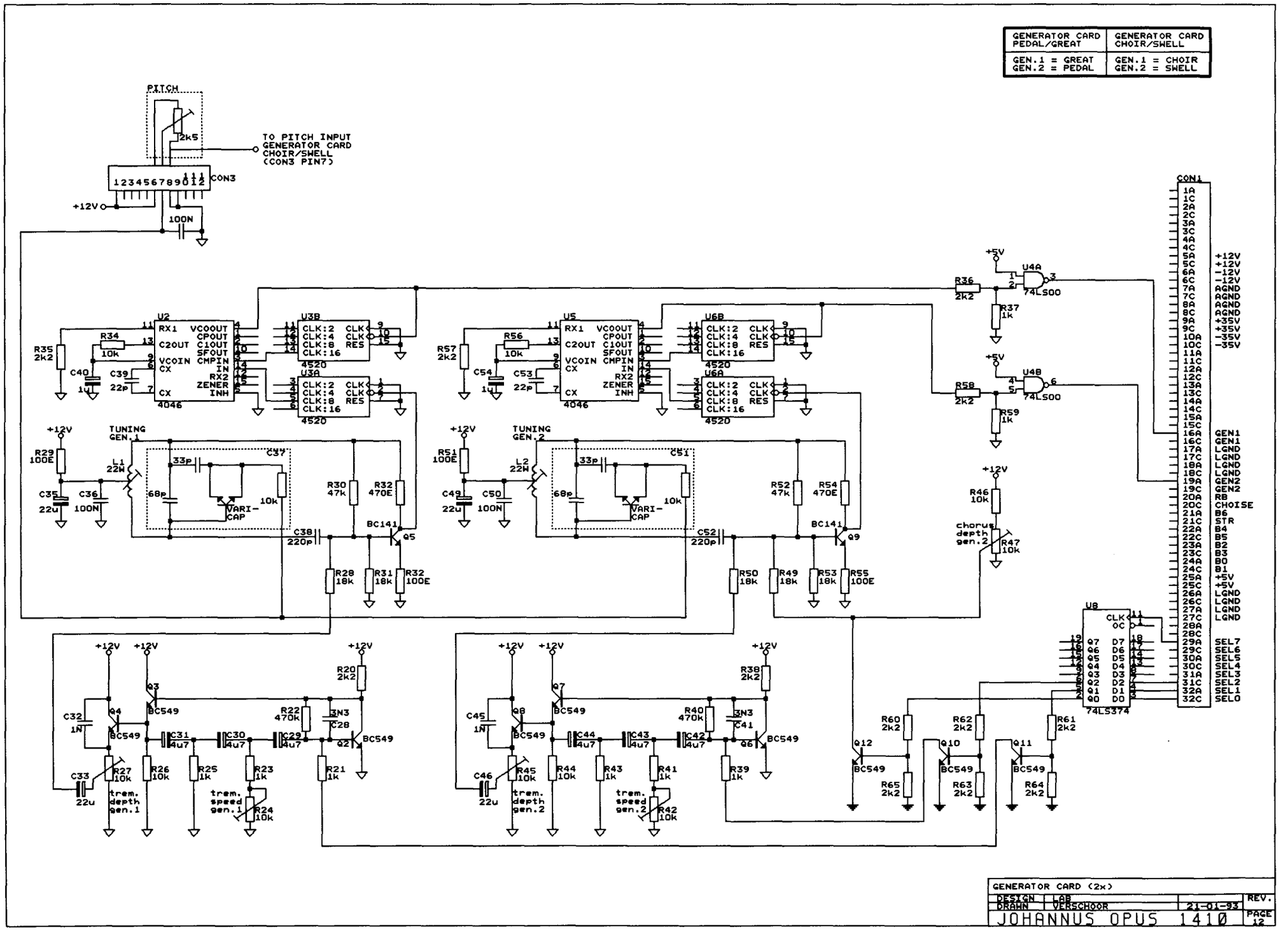
GENERATOR CARD PEDAL/GREAT
GENERATOR CARD CHOIR/SWELL
GEN.1 = GREAT
GEN.2 = PEDAL
GEN.1 = CHOIR
GEN.2 = SWELL
PITCH
2k5
TO PITCH INPUT GENERATOR CARD CHOIR/SWELL (CON3 PIN7)
CON3
+12V
100N
U2
4046
U3B
U3A
4520
U5
U6B
U6A
TUNING GEN.1
TUNING GEN.2
VARI-CAP
BC141
Q5
Q9
U4A
U4B
74LS00
CON1
GEN1
LGND
GEN2
CHOISE
STR
SEL7
SEL6
SEL5
SEL4
SEL3
SEL2
SEL1
SEL0
U8
74LS374
chorus depth gen.2
trem. depth gen.1
trem. speed gen.1
trem. depth gen.2
trem. speed gen.2
BC549
GENERATOR CARD (2x)
DESIGN LAB
DRAWN VERSCHOOR
21-01-93
REV.
JOHANNUS OPUS 1410
PAGE 12

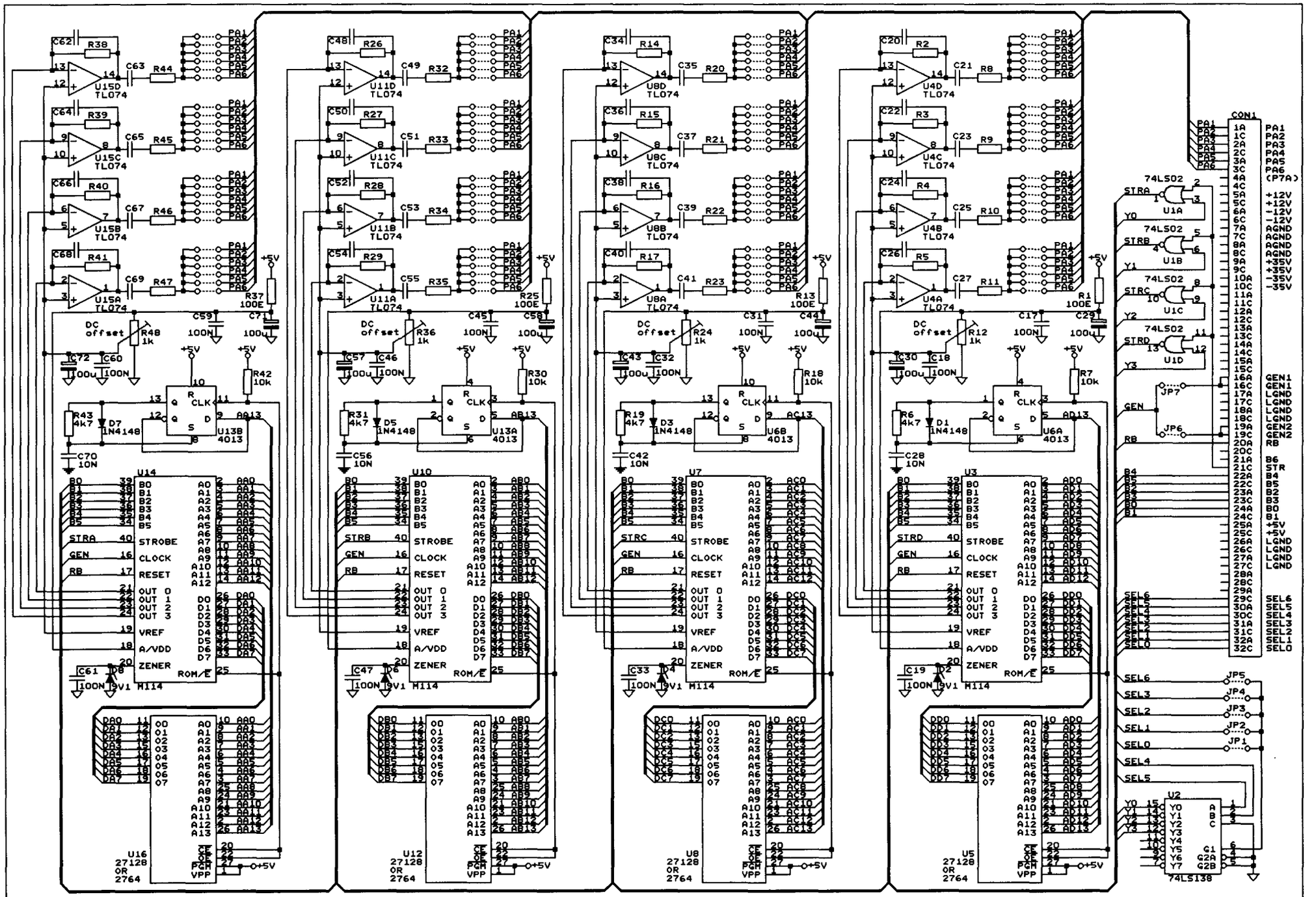

NOTE: IF FOR U5, U8, U12 OR U16 A 2764 EPROM IS PLACED INSTEAD OF A 27128 EPROM, THE 1/2 4013 (U6 AND U13) USED FOR SWITCHING THE UPPER 8K ROM AND THE LOWER 8K ROM, IS NOT NECESSARY.

VOICE CARD (10x)			
DESIGN	LAB		REV.
DRAWN	VERSCHOOR	21-01-93	
JOHANNUS OPUS 1410			PAGE 13

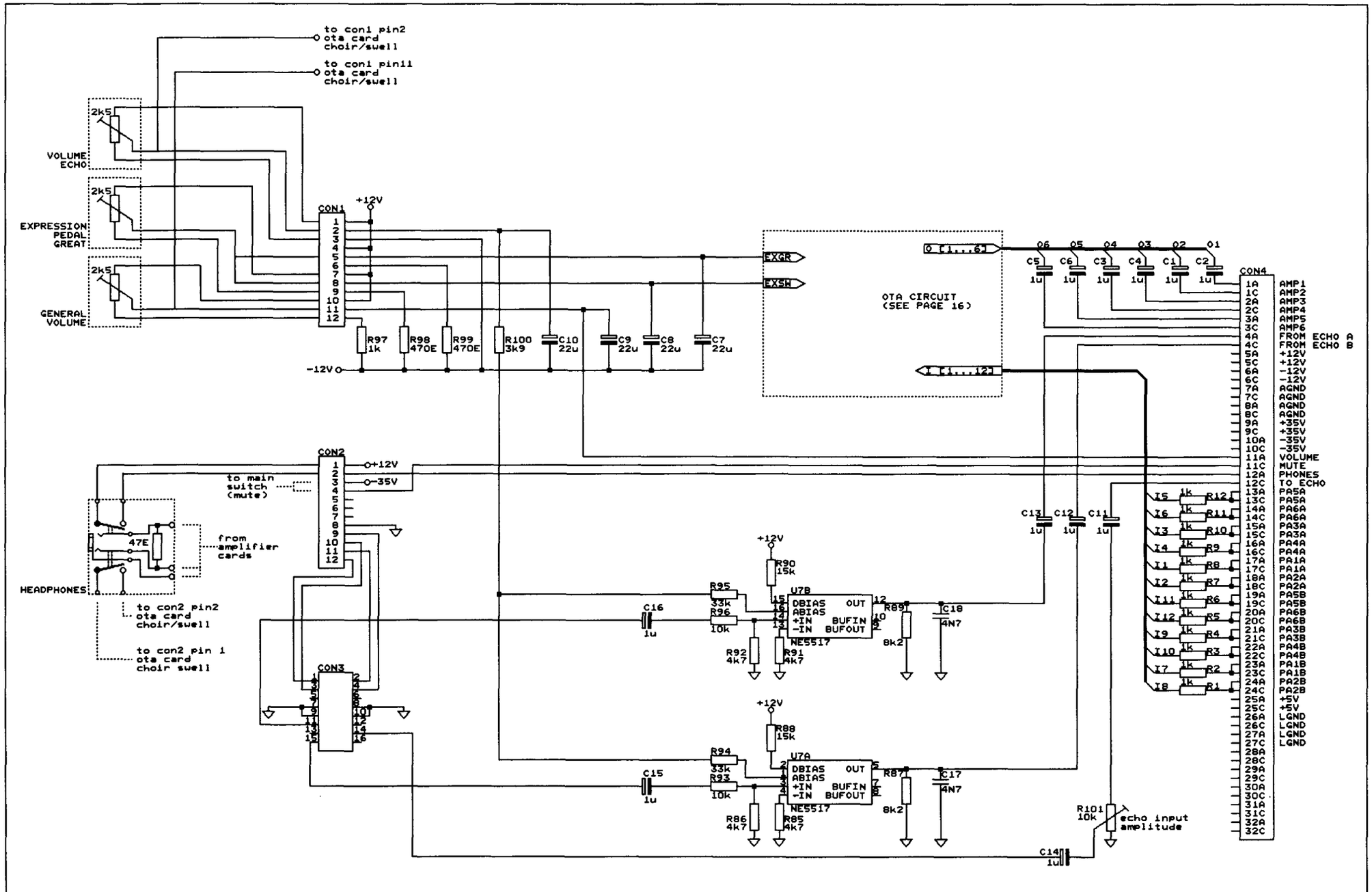

VOLUME CONTROLS; HEADPHONES CONNECTIONS & ECHO INTERFACE (ota card pedal/great)

DESIGN	LAB		REV.
DRAWN	VERSCHOOR	21-01-93	
JOHANNUS OPUS 1410			PAGE 14

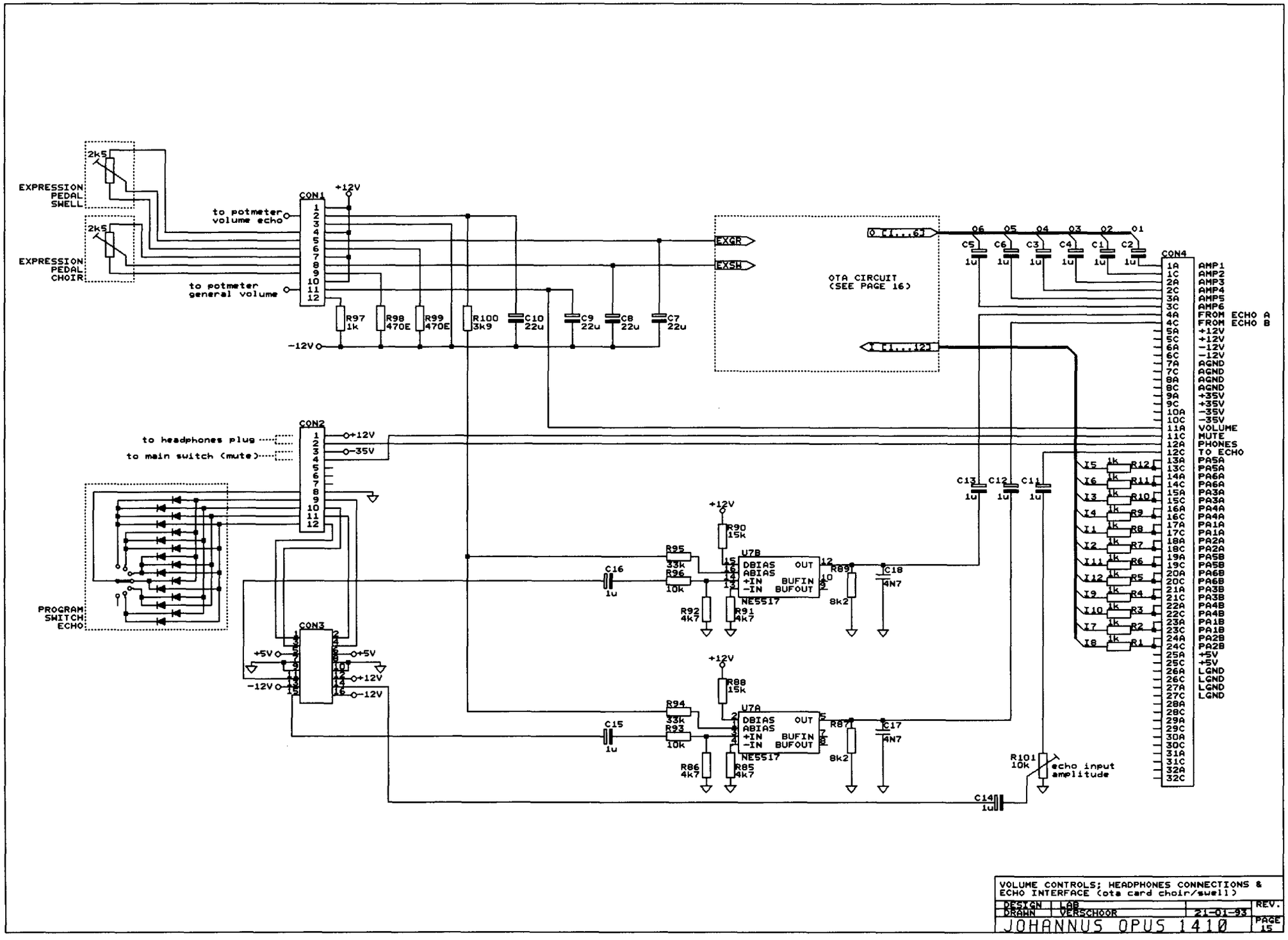

VOLUME CONTROLS; HEADPHONES CONNECTIONS & ECHO INTERFACE (ota card choir/swell)

DESIGN	LAB		REV.
DRAWN	VERSCHOOR	21-01-93	
JOHANNUS OPUS 1410			PAGE 15

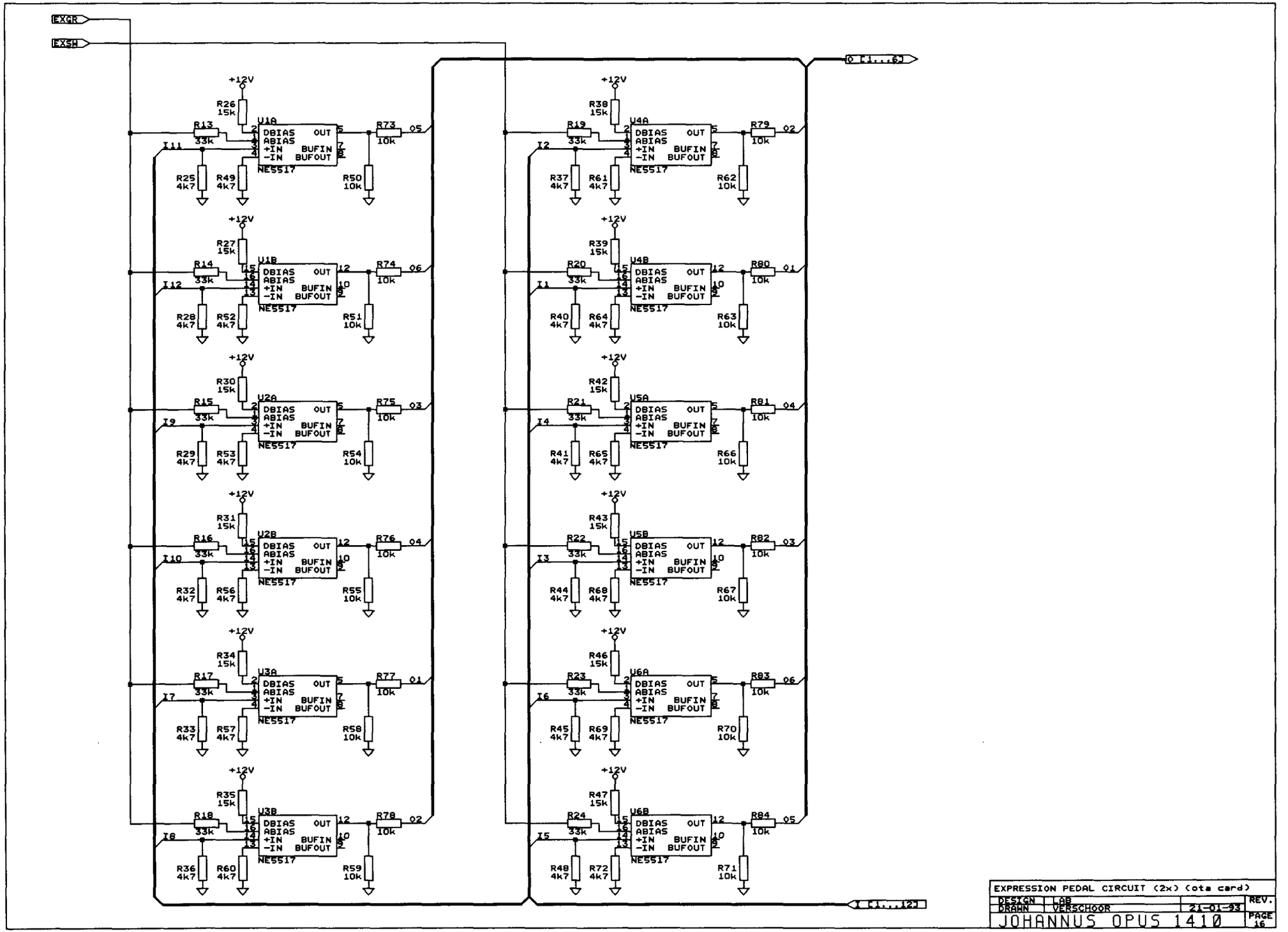

EXPRESSION PEDAL CIRCUIT (2x) (ota card)

DESIGN	LAB		REV.
DRAWN	VERSCHOOR	21-01-93	
JOHANNUS OPUS 1410			PAGE 16

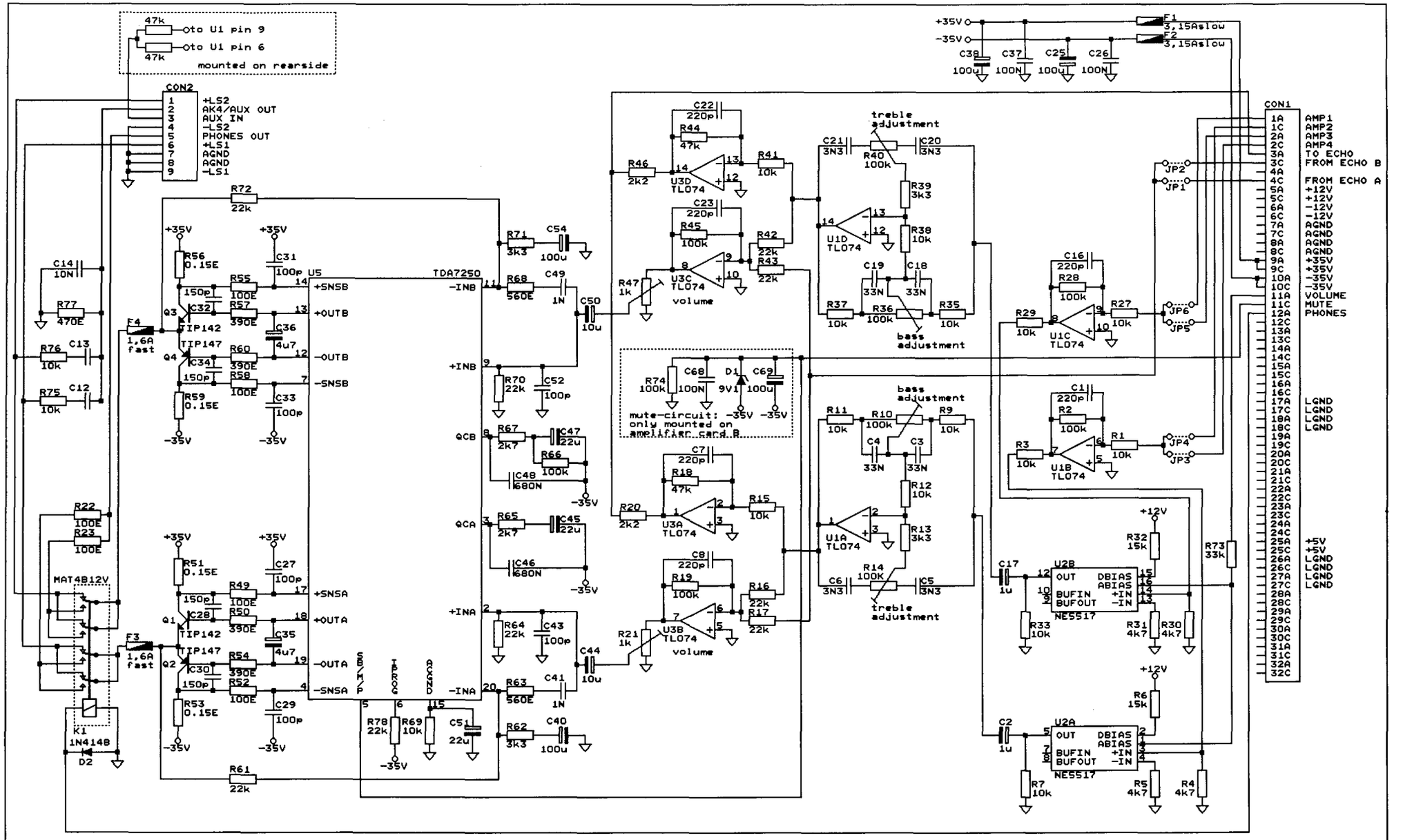

AMPLIFIER CARD (4x)			REV.
DESIGN	LAB		
DRAWN	VERSCHOOR	21-01-93	
JOHANNUS OPUS 1410			PAGE 17

GENERATOR CARD PEDAL/GREAT
(COMPONENT-SIDE VIEW)

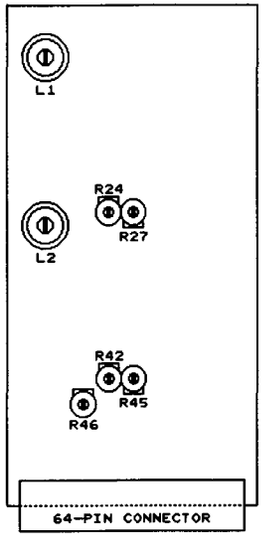

L1 = TUNING GREAT
L2 = TUNING PEDAL
R24 = TREMULANT SPEED GREAT
R27 = TREMULANT DEPTH GREAT
R42 = NOT USED
R45 = NOT USED
R46 = INTENSITY CHORUS PEDAL

GENERATOR CARD CHOIR/SWELL
(COMPONENT-SIDE VIEW)

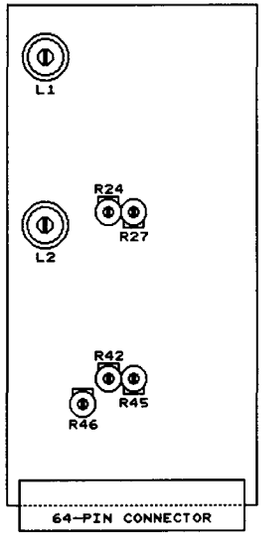

L1 = TUNING CHOIR
L2 = TUNING SWELL
R24 = TREMULANT SPEED CHOIR
R27 = TREMULANT DEPTH CHOIR
R42 = TREMULANT SPEED SWELL
R45 = TREMULANT DEPTH SWELL
R46 = INTENSITY CHORUS SWELL

VOICE CARD
(COMPONENT-SIDE VIEW)

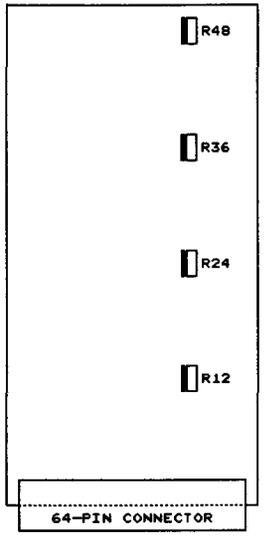

R12 = DC-OFFSET VOICE D
(DISTORSION VOICE D)
R24 = DC-OFFSET VOICE C
(DISTORSION VOICE C)
R36 = DC-OFFSET VOICE B
(DISTORSION VOICE B)
R48 = DC-OFFSET VOICE A
(DISTORSION VOICE A)

NOTE: R12-R24-R36-R48 ARE NOT FOR CHANGING VOLUMES!!

TURNING THESE POTENTIOMETERS WILL GIVE DISTORSION!!

AMPLIFIER CARD
(COMPONENT-SIDE VIEW)

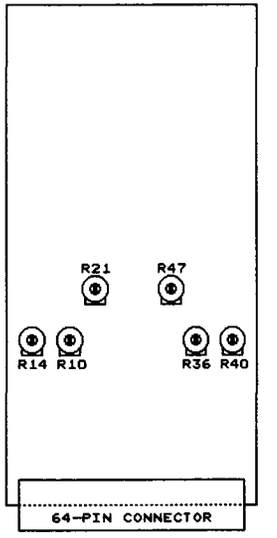

R10 = BASS LEFT AMPLIFIER
R14 = TREBLE LEFT AMPLIFIER
R21 = VOLUME LEFT AMPLIFIER
R36 = BASS RIGHT AMPLIFIER
R40 = TREBLE RIGHT AMPLIFIER
R47 = VOLUME RIGHT AMPLIFIER

OTA CARD
(COMPONENT-SIDE VIEW)

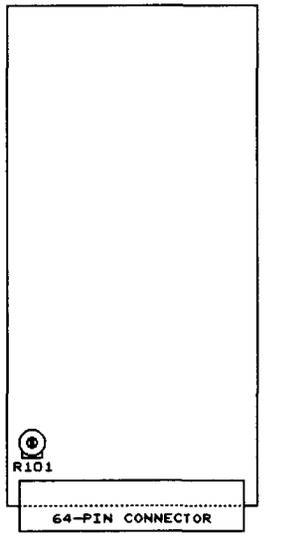

R101 = INPUT AMPLITUDE ECHO

POSITION DIAGRAM ADJUSTMENTS
INTERNAL POTENTIOMETERS

DESIGN	LAB		REV.
DRAWN	VERSCHOOR	21-01-93	
JOHANNUS OPUS 1410			PAGE 18